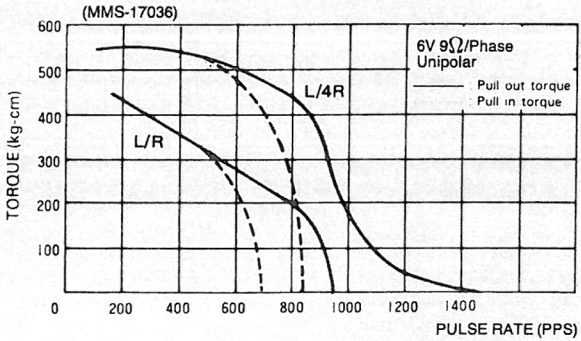
(MMS-17036)
6V 9Ω/Phase
Unipolar
Pull out torque
Pull in torque
L/4R
L/R
TORQUE (kg·cm)
600
500
400
300
200
100
0
200
400
600
800
1000
1200
1400
PULSE RATE (PPS)

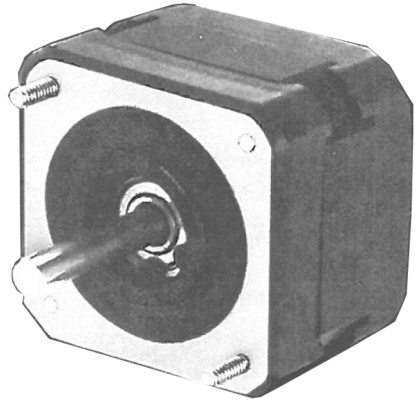

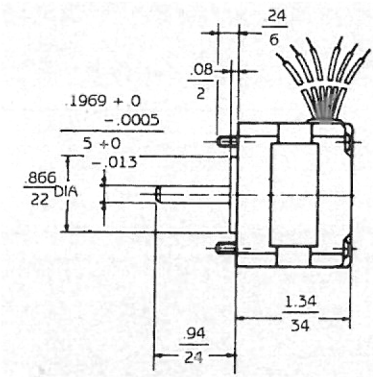
.24
6
.08
2
.1969 + 0
−.0005
5 +0
−.013
.866
22 DIA
1.34
34
.94
24

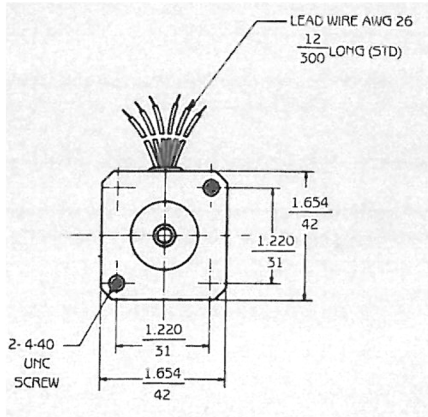
LEAD WIRE AWG 26
12
300 LONG (STD)
1.654
42
1.220
31
1.220
31
1.654
42
2-4-40
UNC
SCREW