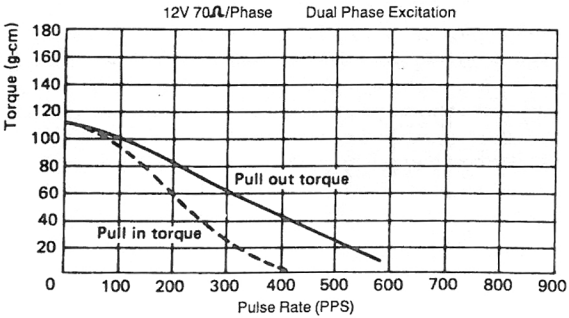
12V 70Ω/Phase
Dual Phase Excitation
Torque (g-cm)
180
160
140
120
100
80
60
40
20
0
100
200
300
400
500
600
700
800
900
Pulse Rate (PPS)
Pull out torque
Pull in torque

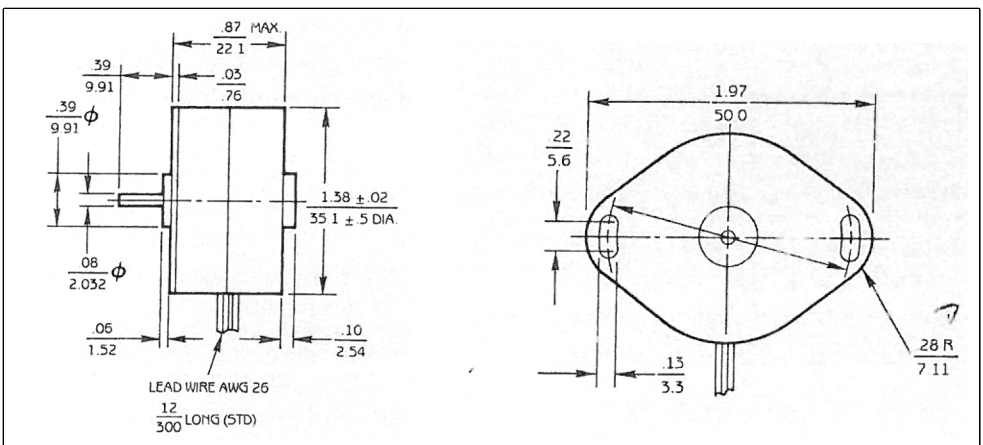
.87 MAX.
22.1
.39
9.91
.03
.76
.39 ϕ
9.91
1.38 ± .02
35.1 ± .5 DIA.
.08 ϕ
2.032
.06
1.52
.10
2.54
LEAD WIRE AWG 26
12
300 LONG (STD)
1.97
50.0
.22
5.6
.13
3.3
.28 R
7.11